A-98 116-144
PAB BUILT UNITS
A-2 § 26.102

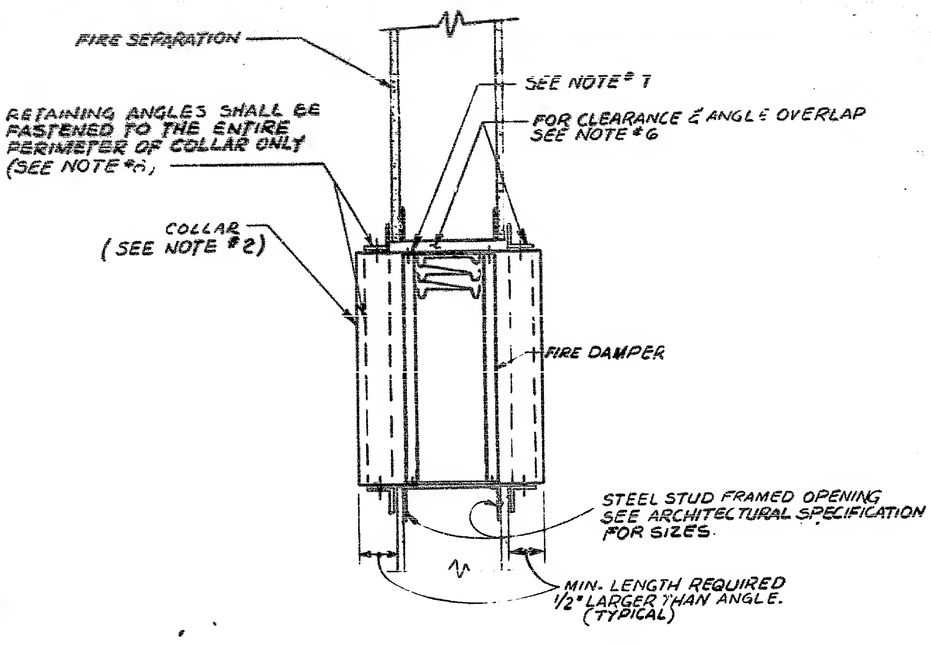

TRANSFER DUCT WITH TYPE "A" FIRE DAMPER

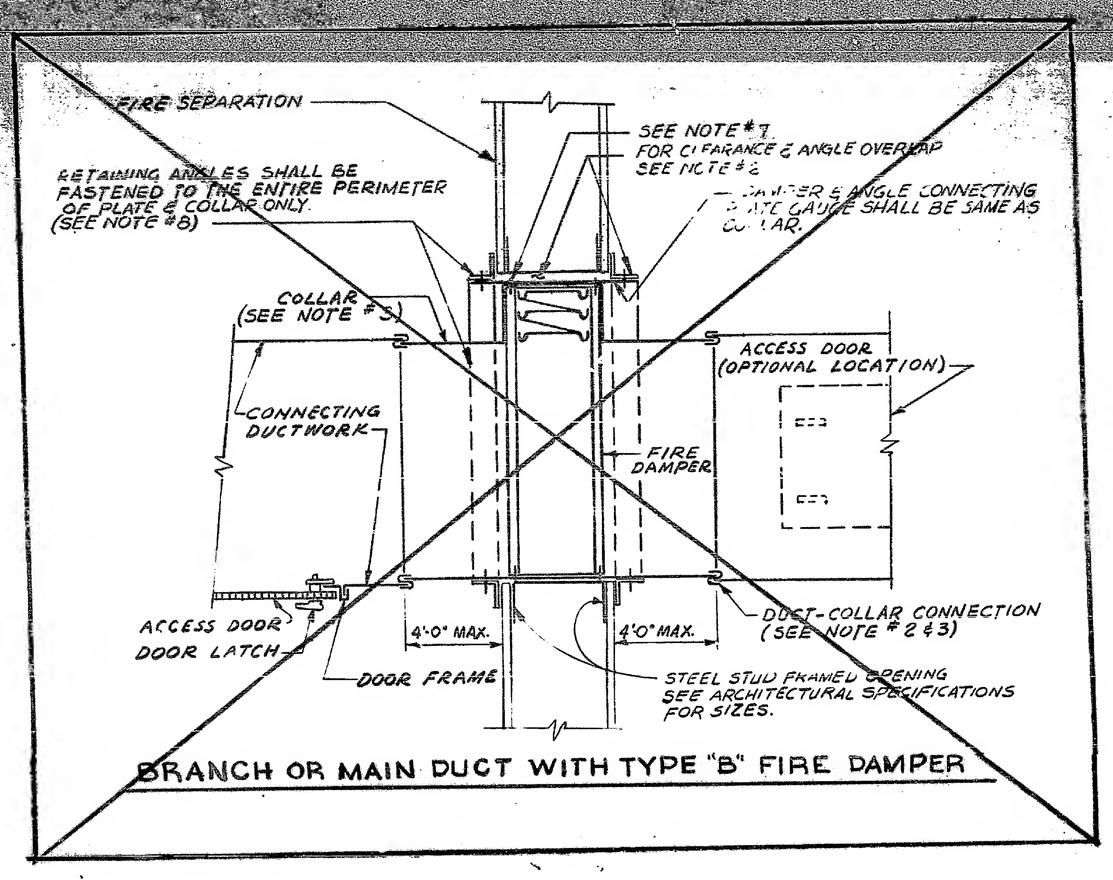

BRANCH OR MAIN DUCT WITH TYPE "B" FIRE DAMPER

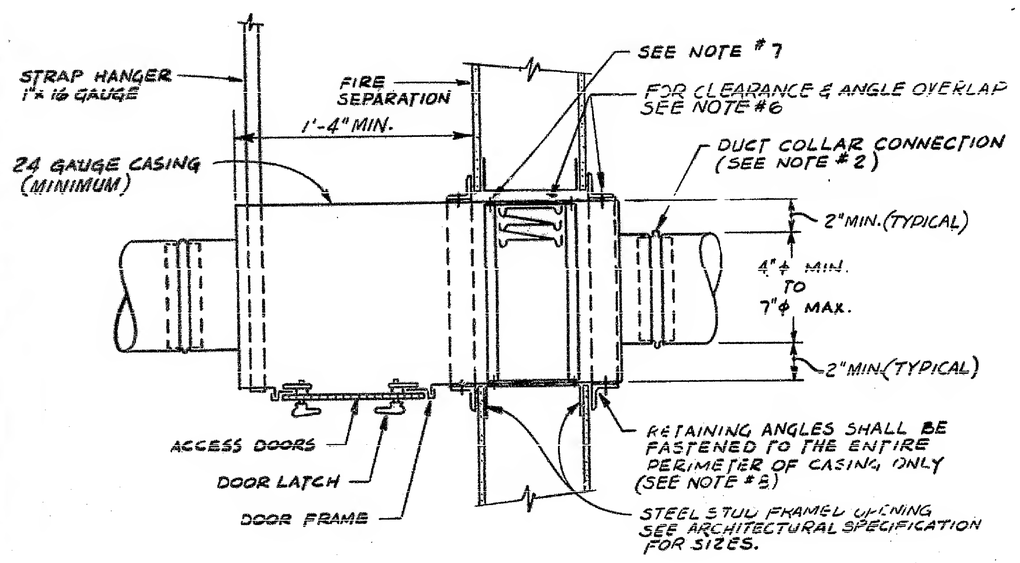

DETAIL OF FINGER OR FLEXIBLE ROUND DUCT
WITH TYPE 'B' FIRE DAMPER

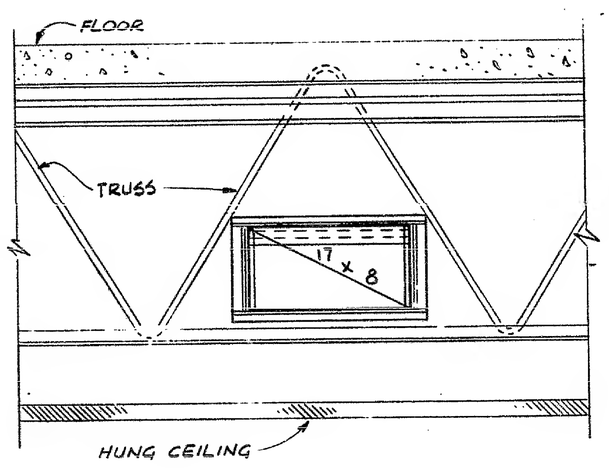

ELEVATION
DETAIL OF TRANSFER DUCT IN TRUSSES
WITH TYPE "A" FIRE DAMPER

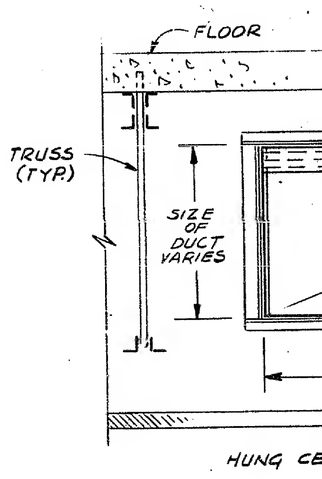

DETAIL OF T
WI

RN	REVISIONS							
DESIGNED J.W.R.	NO.	DATE	APPD.	DESCRIPTION	NO.	DATE	APPD.	DESCRIPTION
DRAWN								
CHECKED AD								
IN CHARGE								

CHIEF ENGINEER

ENGINEER OF DESIGN (AIRPORTS - WTC)

CHIEF MECHANICAL ENGINEER

DATE